ELEKTROPROGRAM
WÓZKI WIDŁOWE

IC-PNEUMATIC

GEN2™ Series

Diesel or LPG engine
Pneumatic or Solid Tires

C20	2000 kg
C25	2500 kg
C30	3000 kg
C35	3500 kg

C20/25/30/35

1917 - 2007
90 YEARS OF MATERIAL HANDLING EQUIPMENT

CLARK
THE FORKLIFT

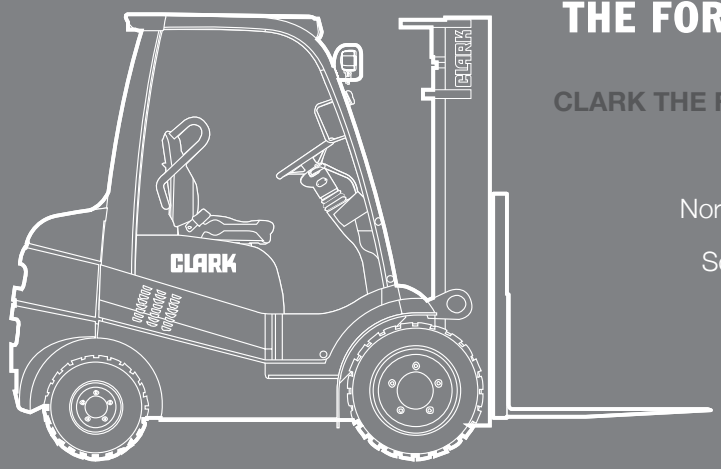

CLARK THE FORKLIFT

Europe

North Amerika

South Korea

www.clarkmheu.com

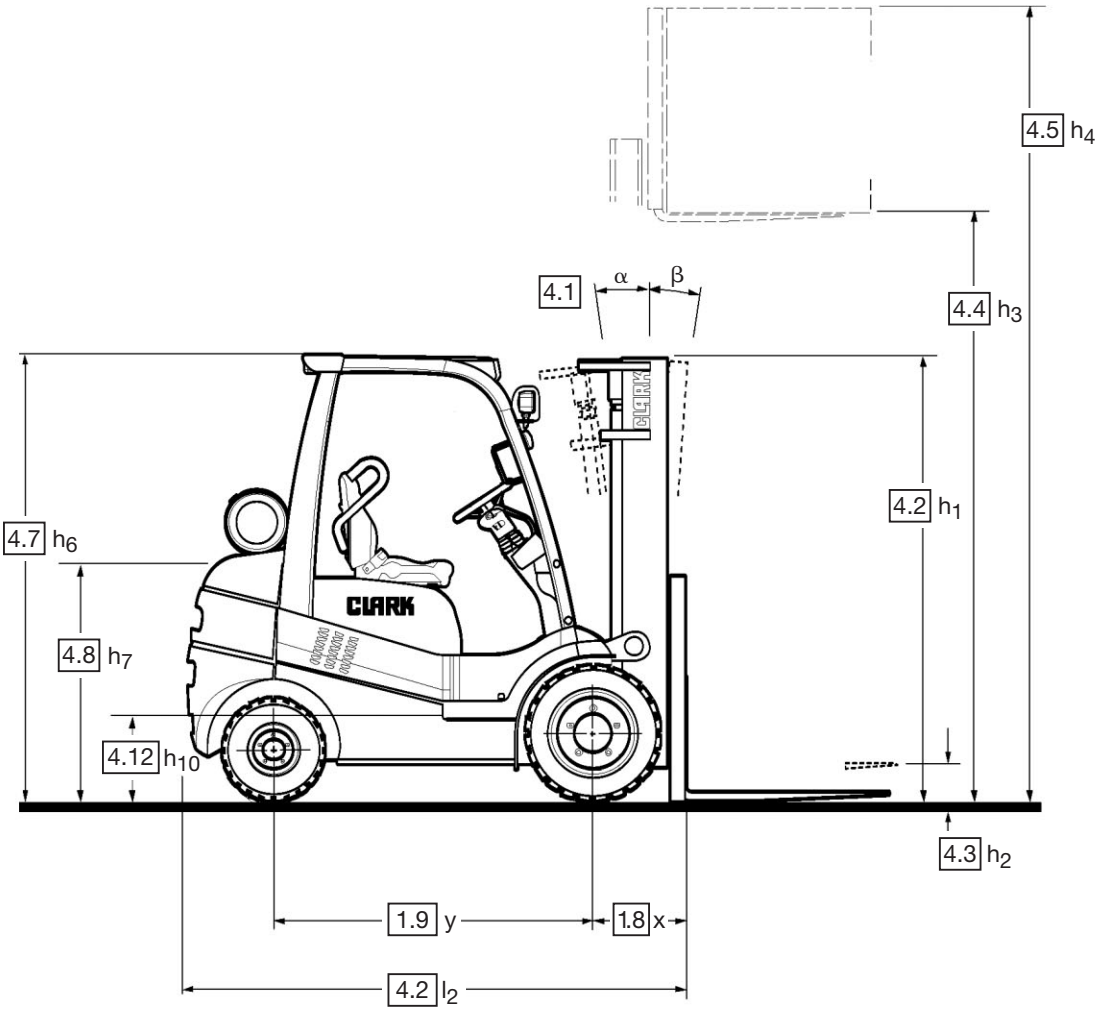

C20/25/30/35

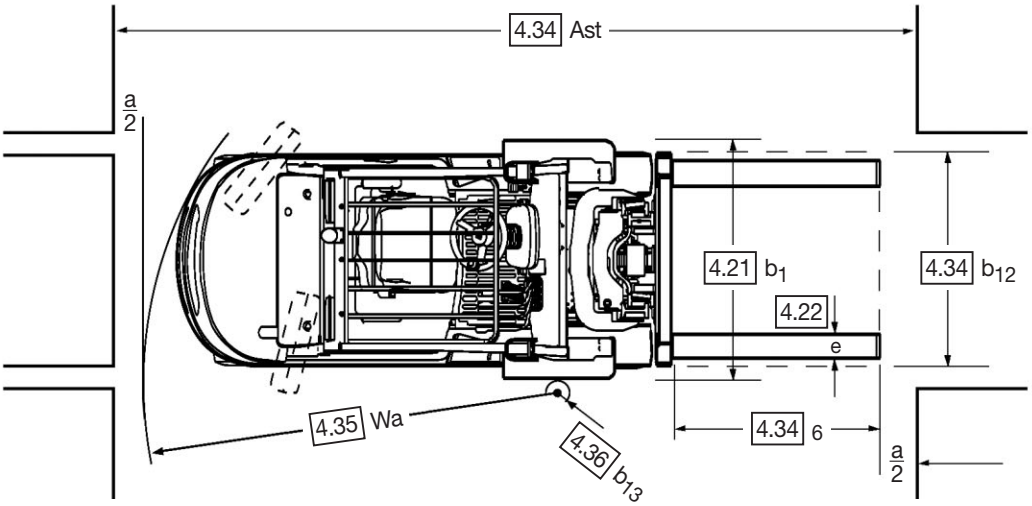

$A_{st} = W_a + x + l_6 + a$

a = 200 mm (safety distance)

For corresponding data see Specification Chart.

DIMENSIONS

GENERAL DATA

Performance may vary +5% and -10% due to motor and system efficiency tolerance. The performance shown represents nominal values which may be obtained under typical operating conditions of a machine. CLARK products and specifications are subject to change without notice.

Truck Capacities

Capacity at different load centres

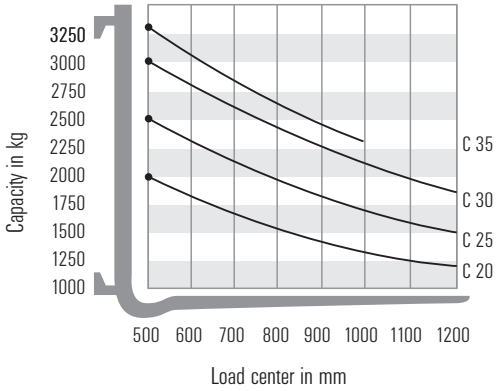

Note:
The listed capacities are valid only for the standard upright in vertical position with standard fork carriage and standard forks, up to max. lifting height of 3300 mm C20-35. The centre of gravity of the load may be displaced by max. 100 mm against the longitudinal centre line of the truck. Load centre is determined from top and front face of forks. The values are based on a 1000 mm cube load configuration with the centre of gravity at the true centre of the cube. With upright tilted forward lower capacity values are valid. Attachments, longer forks, exceptional load dimensions and higher lifting heights may reduce the capacity. Please contact your CLARK dealer if you require further information.

Upright table

Capacity at different load centres

Upright table metrics in mm

CLARK Ref	max. fork height h3	overall height lowered h1	free lift h2 h5*
Standard C 20, 25, 30 L/D (2 Stage Mast, standard free lift)			
V	2110	1575	105
V	2665	1854	105
V	2970	2004	105
V	3300	2165	105
V	3705	2456	105
V	3860	2529	105
V	4165	2799	105
V	4380	2999	105
V	4620	3230	105
V	5170	3495	105

* without LBR

Upright table metrics in mm

CLARK Ref	max. fork height h3	overall height lowered h1	free lift h2 h5*
Triple C 20, 25, 30 L/D (3 Stage Mast, full free lift)			
M	3860	1854	1201
M	4315	2004	1351
M	4800	2164	1511
M	5205	2303	1648
M	5510	2456	1800
M	5740	2529	1875
M	6095	2698	2035
M	6370	2799	2135
M	6830	2999	2344
M	7315	3230	2576

* without LBR

Quad C 20, 25, 30 L/D (4 Stage Mast, full free lift)			
Q	5485	2006	53
Q	6096	2159	59
Q	6553	2311	65
Q	7010	2463	71
Q	7467	2616	77
Q	7925	2769	83

* without LBR

Hi-Lo C 20, 25, 30 L/D (2 Stage Mast, full free lift)			
H	2945	2004	1381
H	3250	2164	1541
H	3531	2303	1681
H	3760	2456	1831
H	3912	2529	1907

* without LBR

Upright table metrics in mm

CLARK Ref	max. fork height h3	overall height lowered h1	free lift h2 h5*
Standard C 35 L/D (2 Stage Mast, standard free lift)			
V	1985	1610	115
V	2545	1890	115
V	2845	2040	115
V	3165	2200	115
V	3590	2490	115
V	3725	2565	115
V	4030	2835	115
V	4245	3035	115
V	4485	3265	115
V	5035	3530	115

* without LBR

Upright table metrics in mm

CLARK Ref	max. fork height h3	overall height lowered h1	free lift h2 h5*
Triple C 35 L/D (3 Stage Mast, full free lift)			
M	3680	1890	1120
M	4140	2040	1270
M	4620	2200	1450
M	5030	2340	1575
M	5340	2490	1725
M	5560	2565	1805
M	5920	2725	1955
M	6190	2835	2085
M	6650	3035	2260
M	7135	3265	2515

* without LBR

CLARK
THE FORKLIFT

SPECIFICATIONS

All values shown are for standard lift truck with standard equipment. If the truck is supplied with options, values may change. All values given may vary +5% and - 10% due the motor and system tolerances and represent nominal values obtained under typical operating conditions. Specifications for Non-emission limited truck.

LPG engine

according to VDI 2198

	1.1 Manufacture (Abbreviation)		CLARK	CLARK	CLARK	CLARK
Characteristics	1.2 Manufacture's designation		**C 20 L**	**C 25 L**	**C 30 L**	**C 35 L**
			STD | Power-up	STD | Power-up	STD | Power-up	–
	1.3 Drive Unit Diesel, L.P. Gas		L.P.-Gas	L.P.-Gas	L.P.-Gas	L.P.-Gas
	1.4 Operator type stand on / driver seated		driver seated	driver seated	driver seated	driver seated
	1.5 Load Capacity / rated load	Q (t)	2,0	2,5	3,0	3,5
	1.6 Load Center distance	c (mm)	500	500	500	500
	1.8 Load Center distance, centre of drive axle to fork face	x (mm)	455	455	455	455
	1.9 Wheelbase	y (mm)	1620	1620	1700	1700
Weight	2.1 Service weight	kg	3465	3805	4235	4672
	2.2 Axle loading, laden front / rear	kg	4876/589	5599/706	6386/849	6857/1115
	2.3 Axle loading, unladen front / rear	kg	1697/1768	1625/2180	1701/2534	1665/3007
Tires, Chassis	3.1 Tire type, P=pneumatic, SE=superelastic, C=cushion 1)		P/P	P/P	P/P	P/P
	3.2 Tire size, front		7.00 x 12-14PR	7.00 x 12-14PR	8.15 x 15-14PR	250 x 15-18PR
	3.2 Tire size, front – dual drive		7.00 x 12-14PR	7.00 x 12-14PR	7.00 x 12-14PR	7.00 x 12-14PR
	3.3 Tire size, rear		6.00 x 9-10PR	6.00 x 9-10PR	6.50 x 10-12PR	6.50 x 10-14PR
	3.5 Wheels, number front / rear (x=drive wheels) 2)		2x (4x)/2	2x (4x)/2	2x (4x)/2	2x (4x)/2
	3.6 Tread, front 2)	b_{10} (mm)	994 (1074)	994 (1074)	1028 (1108)	1050 (1130)
	3.7 Tread, rear	b_{11} (mm)	904	904	912	912
Dimensions	4.1 Tilt of upright / fork carriage, α/β 3)	deg	10/8	10/8	10/8	10/8
	4.2 Height, upright lowered	h_1 (mm)	2165	2165	2180	2200
	4.3 Freelift	h_2 (mm)	110	110	110	115
	4.4 Lift height 4)	h_3 (mm)	3300	3300	3300	3165
	4.5 Height upright extended	h_4 (mm)	3900	3900	3900	3900
	4.7 Height overheadguard (cab): Std / Container 3)	h_6 (mm)	2165/2050	2165/2050	2165/2050	2165/2050
	4.8 Seat hight	h_7 (mm)	1139	1139	1139	1139
	4.12 Coupling hight	h_{10} (mm)	410	410	410	410
	4.19 Overall length	l_1 (mm)	3558	3558	3558	3558
	4.20 Length to face of forks	l_2 (mm)	2496	2558	2668	2770
	4.21 Width 2)	b_1/b_2 (mm)	1187 (1665)	1187 (1665)	1237 (1665)	1315 (1665)
	4.22 Fork dimensions	s/e/l (mm)	45 x 100 x 1070	45 x 100 x 1070	45 x 122 x 1070	50 x 122 x 1067
	4.23 Fork carriage DIN 15173, A, B		II A	II A	II A	II A
	4.24 Fork carriage width	b_3 (mm)	1145	1145	1145	1145
	4.31 Ground clearance minimum, laden 3)	m_1 (mm)	135	135	150	170
	4.32 Ground clearance center of wheelbase 3)	m_2 (mm)	155	155	165	165
	4.34 Stacking aisle for pallets 800x1200 (l_6·b_{12})		3700	3700	3700	3700
	4.34 Stacking aisle for pallets 1000x1200 (l_6·b_{12})	A_{st} (mm)	3900	3900	3900	3900
	4.34 Stacking aisle for pallets 1200x800 (l_6·b_{12})	A_{st} (mm)	4100	4155	4260	4355
	4.35 Turning radius	W_a (mm)	2245	2300	2405	2480
	4.36 Internal turning radius	b_{13} (mm)	–	–	–	–
Performance	5.1 Travel speed laden/unladen	km/h	20,3/20,9 | 21,4/22,0	20,1/20,5 | 21,3/21,7	20,2/21,0 | 21,5/22,3	20,3/22,3
	5.2 Lift speed laden/unladen	m/s	0,49/0,55 | 0,54/0,63	0,48/0,55 | 0,53/0,63	0,47/0,55 | 0,52/0,63	0,48/0,63
	5.3 Lowering speed laden/unladen	m/s	0,47/0,43 | 0,47/0,43	0,47/0,43 | 0,47/0,43	0,47/0,43 | 0,47/0,43	0,47/0,43
	5.5 Drawbar pull laden/unladen	N	–	–	–	–
	5.6 Max. drawbar pull laden/unladen	N	1717/1028 (1614/1050) | 1855/1050	1722/975 (1622/900) | 1875/980	1555/1021 (1466/1025) | 1771/1025	1545/1010 (1500/999)
	5.7 Gradeability laden 5) /unladen 6)	%	–/–	–/–	–/–	–/–
	5.8 Max. gradeability laden 5) /unladen 6)	%	33,7/23,6 (27,0/29,5) | 30,2/29,5	28,4/20,6 (23,2/25,5) | 26,5/25,5	22,0/19,7 (18,3/22,9) | 21,2/22,9	19,6/17,3 (17,0/16,4)
	5.9 Acceleration time laden/unladen (0 - 15 m)	s	4,6/4,0	4,6/4,0	4,6/4,0	4,6/4,0
	5.10 Service brake		hydraulic	hydraulic	hydraulic	hydraulic
Drive Line	7.1 Manufacturer / Type		MMC/4G64	MMC/4G64	MMC/4G64	MMC/4G64
	7.2 Rated output acc. DIN 70 020	kW	55 (32,8) | 37,3	55 (32,8) | 37,3	55 (32,8) | 37,3	55 (32,8)
	7.3 Rated speed acc. DIN 70 020	min^{-1}	2600 (2200) | 2640	2600 (2200) | 2640	2600 (2200) | 2640	2600 (2200)
	7.4 No. of cylinders / displacement	$/cm^3$	4/2350	4/2350	4/2350	4/2350
	7.5 Fuel consumption acc. VDI-Cycles	Diesel=l/h, L.P.Gas=kg/h	–	–	–	–
Miscellaneous	8.1 Type of control		hydrodynamic/continous	hydrodynamic/continous	hydrodynamic/continous	hydrodynamic/continous
	8.2 Operating pressure for attachments	bar	140	140	140	140
	8.3 Oil volume for attachments	l/min	–	–	–	–
	8.4 Sound level, driver's ear 7)	dB (A)	79	79	79	79
	8.5 Towing coupling, class/type DIN		–	–	–	–

1) Optional solid tires 2) Brackets for dual drive 3) Listed values can change with other tires and uprights 4) For further lift heights, see upright table
5) 2.0 kph 6) At $\mu = 0.8$ 7) Equivalent permanent sound-pressure level L pAeq,T in accordance with DIN EN 12053

CLARK
THE FORKLIFT

SPECIFICATIONS

All values shown are for standard lift truck with standard equipment. If the truck is supplied with options, values may change. All values given may vary +5% and - 10% due the motor and system tolerances and represent nominal values obtained under typical operating conditions. Specifications for Non-emission limited truck.

Diesel engine

according to VDI 2198

	1.1 Manufacture (Abbreviation)		CLARK	CLARK	CLARK	CLARK
Characteristics	1.2 Manufacture's designation		**C 20 D**	**C 25 D**	**C 30 D**	**C 35 D**
	1.3 Drive Unit Diesel, L.P. Gas		Diesel	Diesel	Diesel	Diesel
	1.4 Operator type stand on / driver seated		driver seated	driver seated	driver seated	driver seated
	1.5 Load Capacity / rated load	Q (t)	2,0	2,5	3,0	3,5
	1.6 Load Center distance	c (mm)	500	500	500	500
	1.8 Load Center distance, centre of drive axle to fork face	x (mm)	455	455	455	455
	1.9 Wheelbase	y (mm)	1620	1620	1700	1700
Weight	2.1 Service weight	kg	3465	3805	4235	4672
	2.2 Axle loading, laden front / rear	kg	4933/637	5654/816	6455/945	6917/1220
	2.3 Axle loading, unladen front / rear	kg	1760/1870	1688/2282	1769/2630	1724/3142
Tires, Chassis	3.1 Tire type, P=pneumatic, SE=superelastic, C=cushion 1)		P/P	P/P	P/P	P/P
	3.2 Tire size, front		7.00 x 12-14PR	7.00 x 12-14PR	8.15 x 15-14PR	250 x 15-18PR
	3.2 Tire size, front – dual drive		7.00 x 12-14PR	7.00 x 12-14PR	7.00 x 12-14PR	7.00 x 12-14PR
	3.3 Tire size, rear		6.00 x 9-10PR	6.00 x 9-10PR	6.50 x 10-12PR	6.50 x 10-14PR
	3.5 Wheels, number front / rear (x=drive wheels) 2)		2x (4x)/2	2x (4x)/2	2x (4x)/2	2x (4x)/2
	3.6 Tread, front 2)	b_{10} (mm)	994 (1074)	994 (1074)	1028 (1108)	1050 (1130)
	3.7 Tread, rear	b_{11} (mm)	904	904	912	912
Dimensions	4.1 Tilt of upright / fork carriage, α/β 3)	deg	10/8	10/8	10/8	10/8
	4.2 Height, upright lowered	h_1 (mm)	2165	2165	2180	2200
	4.3 Freelift	h_2 (mm)	110	110	110	115
	4.4 Lift height 4)	h_3 (mm)	3300	3300	3300	3165
	4.5 Height upright extended	h_4 (mm)	3900	3900	3900	3900
	4.7 Height overheadguard (cab): Std / Container 3)	h_6 (mm)	2165/2050	2165/2050	2165/2050	2165/2050
	4.8 Seat hight	h_7 (mm)	1139	1139	1139	1139
	4.12 Coupling hight	h_{10} (mm)	410	410	410	410
	4.19 Overall length	l_1 (mm)	3558	3558	3558	3558
	4.20 Length to face of forks	l_2 (mm)	2496	2558	2668	2770
	4.21 Width 2)	b_1/b_2 (mm)	1187 (1665)	1187 (1665)	1237 (1665)	1315 (1665)
	4.22 Fork dimensions	s/e/l (mm)	45 x 100 x 1070	45 x 100 x 1070	45 x 122 x 1070	50 x 122 x 1067
	4.23 Fork carriage DIN 15173, A, B		II A	II A	II A	II A
	4.24 Fork carriage width	b_3 (mm)	1145	1145	1145	1145
	4.31 Ground clearance minimum, laden 3)	m_1 (mm)	135	135	150	170
	4.32 Ground clearance center of wheelbase 3)	m_2 (mm)	155	155	165	165
	4.34 Stacking aisle for pallets 800x1200 (l_6·b_{12})		3700	3700	3700	3700
	4.34 Stacking aisle for pallets 1000x1200 (l_6·b_{12})	A_{st} (mm)	3900	3900	3900	3900
	4.34 Stacking aisle for pallets 1200x800 (l_6·b_{12})	A_{st} (mm)	4100	4155	4260	4355
	4.35 Turning radius	W_a (mm)	2245	2300	2405	2480
	4.36 Internal turning radius	b_{13} (mm)	–	–	–	–
Performance	5.1 Travel speed laden/unladen	km/h	19,3/20,4	19,3/20,4	20,5/21,4	21,1/21,7
	5.2 Lift speed laden/unladen	m/s	0,56/0,65	0,55/0,65	0,54/0,65	0,50/0,63
	5.3 Lowering speed laden/unladen	m/s	0,47/0,43	0,47/0,43	0,47/0,43	0,47/0,43
	5.5 Drawbar pull laden/unladen	N	–	–	–	–
	5.6 Max. drawbar pull laden/unladen	N	2489/1056 (2363/1029)	2630/1012 (2426/978)	2531/1061 (2105/1028)	2102/1024 (2090/1023)
	5.7 Gradeability laden 5) /unladen 6)	%	–/–	–/–	–/–	–/–
	5.8 Max. gradeability laden 5) /unladen 6)	%	49,3 (42,3)/22,8 (27,1)	44,5 (36,1)/20,1 (23,8)	36,4(28,5)/19,3 (22,9)	26,7 (21,4)/21,7 (21,4)
	5.9 Acceleration time laden/unladen (0 - 15 m)	s	4,6/4,0	4,6/4,0	4,6/4,0	4,6/4,0
	5.10 Service brake		hydraulic	hydraulic	hydraulic	hydraulic
Drive Line	7.1 Manufacturer / Type		Yanmar 4TNV94L (4TNE94)	Yanmar 4TNV94L (4TNE94)	Yanmar 4TNV94L (4TNE94)	Yanmar 4TNV94L (4TNE94)
	7.2 Rated output acc. DIN 70 020	kW	44 (42,9)	44 (42,9)	44 (42,9)	44 (42,9)
	7.3 Rated speed acc. DIN 70 020	min^{-1}	2500	2500	2500	2500
	7.4 No. of cylinders / displacement	$/cm^3$	4/3054 (2776)	4/3054 (2776)	4/3054 (2776)	4/3054 (2776)
	7.5 Fuel consumption acc. VDI-Cycles	Diesel=l/h, L.P.Gas=kg/h	–	–	–	–
Miscellaneous	8.1 Type of control		hydrodynamic/continous	hydrodynamic/continous	hydrodynamic/continous	hydrodynamic/continous
	8.2 Operating pressure for attachments	bar	140	140	140	140
	8.3 Oil volume for attachments	l/min	–	–	–	–
	8.4 Sound level, driver's ear 7)	dB (A)	81	81	81	81
	8.5 Towing coupling, class/type DIN		–	–	–	–

1) Optional solid tires 2) Brackets for dual drive 3) Listed values can change with other tires and uprights 4) For further lift heights, see upright table
5) 2.0 kph 6) At $\mu = 0.8$ 7) Equivalent permanent sound-pressure level L pAeq,T in accordance with DIN EN 12053

PRODUCT DESCRIPTION

CLARK GEN2 SERIES pneumatic tire trucks are suited to diverse applications in manufacturing, warehousing and distribution. Offered with an LPG, LPG High Performance,Gasoline or Diesel fuel system, these trucks provide very high levels of operator comfort, reliability, ease of service and low noise.

Operator Control & Comfort

Gen2 Series trucks feature a rubber isolated operator cell that provides a quiet, comfortable and spacious environment for operators of all sizes. The large floor area is free of obstructions covered with a long wearing rubber mat, and easily removable without tools. Large open steps and grab handles assist entry and exit from both sides. Twopedal inch-brake system has low height, short travel pedals. Left pedal is for inching and brake operation; right pedal is for brake only. Left foot actuated parking brake. Hydraulic control levers are cowl-mounted. Left hand fingertip operated directional control is electrically actuated; direction reversals are hydraulically cushioned. Safety seat with retractable seat belt and lateral restraints are proven effective. Six inches (150 mm) of front to back seat adjustment and separate seat and back cushions have molded bolsters that add comfort. Visual and audio seat belt prompt on start-up. Tilt steering column locks in one of six positions; 38° total travel. Small, thick section wheel is easily operated with one hand. Clamshell hood gives easy access for daily inspections.

Instrument Panel

The CLARK Information Center (CIC) features a full LED/digital display with visual and audible engine monitoring warnings. Functions being monitored include water temperature, engine oil pressure, transmission oil temperature, ammeter, and low LPG fuel. An automatic engine shutdown system continuously monitors engine oil pressure, engine coolant temperature and transmission oil temperature. An hour meter and neutral start feature are also featured. The CIC includes prompts for the seat belt, parking brake, ignition key, headlights and service engine light.

Engine

Mitsubishi model 4G64, 2.4-liter (143 CI) 4-cylinder overhead cam engine with internal dynamic balancers and an LPG or gasoline fuel system. Camshaft and balancers are cog belt driven. Cast iron deep skirt block with aluminum cylinder head, 5-main bearing crankshaft. Hydraulic valve lifters and electronic ignition reduce maintenance requirements. IMPCO LPG fuel systems are used with brackets for 33.5 lb. (15.2 kg) or 43.5 lb. (19.7 kg) tanks. Yanmar model 4TNE94 2.8-Liter (171 C.I) 4-cylinder Diesel engine. Vertical exhaust and a high volume hydraulic pump is standard on Diesel.

Engine Accessories/Capacities

Trucks are 12-volt negative ground and incorporate heavy-duty starters with anti-restart system. Batteries are rated at 550 CCA on LPG, 700 CCA on Diesel at 0° F (-18° C). All utilize high capacity air cleaners with raised air intake, automatic dirt ejectors and monitor indication for service. Supplemental optional safety element and precleaners can be added without other changes. Central electric panel with blade fuses and relays are easily accessible. Environmentally sealed connectors; fusible links located outside of harness for ease of access. Filters are easily serviced and located to prevent spillage. Crankcase capacity is 4.0 qts. (3.8 L).

Transaxle

CLARK model TA 30 single speed, full reversing, powershift transaxle with high stall ratio industrial torque converter, full-floating drive axles, and drum/shoe brake assemblies with dirt shields. Solenoid actuated, hydraulically modulated directional control and mechanically actuated, hydraulic inching. Helical drive gears operate smoothly and reduce noise. Auxiliary gear drive for efficient, bolt on hydraulic pump operation. Control elements and test ports readily accessible for service. Heavy-duty oil-to-air transmission cooler provides independent transmission cooling. Full-flow transmission spin-on oil filter and sump screen are easily serviced.

Brakes

Self-energizing, hydraulically-actuated drum and shoe type service brakes. Shrouds prevent dirt entry into the brake area. Inching and brake operation with left pedal, braking only with right pedal. Heavy cast iron brake shoes, backing plates and drums with openings for inspection and adjustment; all components asbestos-free. Brakes are quickly accessed by removing wheel and brake drum; no axle removal is required. Left foot parking brake pedal actuates service brakes at both drive wheels.

Hydraulics

Single gear driven pump provides fluid for hydraulic functions and steering. Priority-demand steering system conserves energy by supplying hydraulic fluid on demand-only basis. Hydraulic tank is integral with truck frame, in-tank return line filter is quickly changed without spill. A quick-connect pressure port on the pump enables convenient pressure checks. All pressure fittings utilize O-ring type face seals to reduce possibility of leakage. Sump tank capacity is 8.0 gal. (30.2 L).

Steering

Full hydrostatic steering. A compact axle beam with an integral double acting steer cylinder. Spindle assemblies incorporate king pins and tapered roller bearings to provide a rugged, easily serviced assembly. Rubber isolation mounts that support the axle absorb shock and reduce noise. Metal shields protect bearing seals from wire or in-plant debris. Grease fittings extend linkage and king pin/bearing service life.

Upright

High visibility standard, Hi-Lo, triple stage and Quad uprights of heavy C-channel outer rails and full I-section inner and intermediate rails. A wide range of lift heights are available. All-roller operation of upright rails; upright rail and carriage rollers are canted to accept both normal and side thrust loads. The fork carriage employs six main rollers and additional side thrust rollers. Carriages are ITA Class II and III specifications. Load backrest is designed for optimum visibility. Hydraulic cushioning between stages aids in quiet operation. Selflubricating trunion bushings and simplified roller access improve serviceability. Hydraulic tilt lock valve prevents improper tilt cylinder operation; integral flow limiting valves prevent rapid carriage descent in the event of a line failure; and lowering control allows faster lowering speeds when empty or with light loads.

Additional Features

A single auxiliary valve and two headlights mounted on the overhead guard are standard equipment. High Performance Package is standard on the C35. The auxiliary hydraulic flow can be easily adjusted at the main valve to match the requirements of different attachments. With a one-piece hood and quickly removable floorplate, all routine maintenance checkpoints are readily accessible. The operator cell is designed for operator comfort and productivity. Color is high visibility CLARK Green with non-glare matte black trim and white wheels. Tow pin in the counterweight and rear tie-downs are standard. The Operator Manual is permanently attached inside the rear pocket of the comfortable safety seat.

Available Equipment

Auxiliary valves, hose adaptations, sideshifters, hydraulic control options, High Performance Package (standard on C35L & C20/35D), Unitrol foot directional control, reduced height overhead guard, operator cab with heater, combination stop/tail/backup lights, rear work light, turn signal lights, strobe lights, backup alarm, mirrors, convenience console, suspension seat, vinyl and cloth, U.L. Type LPS construction, seat actuated engine shutdown, vertical exhaust (standard on Diesel), 3-way catalytic exhaust purifier, 3-way catalytic exhaust purifier with closed loop, CARB certified, pre-cleaner – overhead guard mounted, air cleaner safety element, belly pan, radiator screen, Bottler's tilt and various tire options.

CLARK
THE FORKLIFT

CLARK Europe GmbH
Neckarstraße 37
D - 45478 Mülheim an der Ruhr
Tel. +49 208 377336 0
Fax +49 208 377336 36
email: info-europe@clarkmheu.com
www.clarkmheu.com

Your authorized CLARK dealer is:

En. 01/2007